EDMS
19-Jul-2018
As-Built

Total Sheet: 6

Vendor´s name	:	KSB AKTIENGESELLSCHAFT
Company´s name	:	Nghi Son Refinery and Petrochemical LLC. JGCS Consortium SK Engineering & Construction Co., Ltd.
Plant Location	:	Nghi Son, Vietnam
Project name	:	NSRP Complex Project
P / Order No.	:	0-6495-PS2158-102-A-100
Equipment /Material name	:	STG Condensate Pump
Item number	:	113-ST-301-P01 A/B
Document title	:	Cross Sectional Drawing incl. Parts List and Pipeline DWG API Plan 11

SK engineering & construction

AS BUILT

BY: J.G.KIM

DATE: 2015.10.25

PROJECT (JOB No.: 0-6495-20)		
DOCUMENT CLASS:	X	
ISSUE PURPOSE:	AB	
RESULT CODE: A, B, R, F	(A)	
NEXT STATUS: FA, FR, FI, FC, AB	(-)	
RESUBMISSION DATE:	(-)	
RESPONSIBLE DEPT:/PERSON.:	(-)	
Review Date:	(-)	
A: Approved without Comment; B: Approved with Minor Comment R: Not Approved; F: Not Subject to Review		
Approval or review hereunder shall not be construed to relieve Vendor/ Subcontractor of his responsibilities and liability under the Contract		

Purchaser DOC. No.	ORIG.	PURCHASE ORDER NO.	SERIAL	REV.
	V	S2158-102-A-	173	4

Rev.	Date:	Description	Prep´d	Chk´d	App´d
4	14 Oct 2015	As Built	fichmar	langmar	wiltrei
3	20 May 2015	For Construction	fichmar	langmar	wiltrei
2	05 Feb 2015	For Review	fichmar	langmar	wiltrei
1	23 Jan 2015	For Review	fichmar	langmar	wiltrei
0	19 Jan 2015	For Review	fichmar	langmar	wiltrei

Vendor´s Name: KSB

INDRA
29-OCT-2015
AS BUILT

EDMS
19-Jul-2018
As-Built

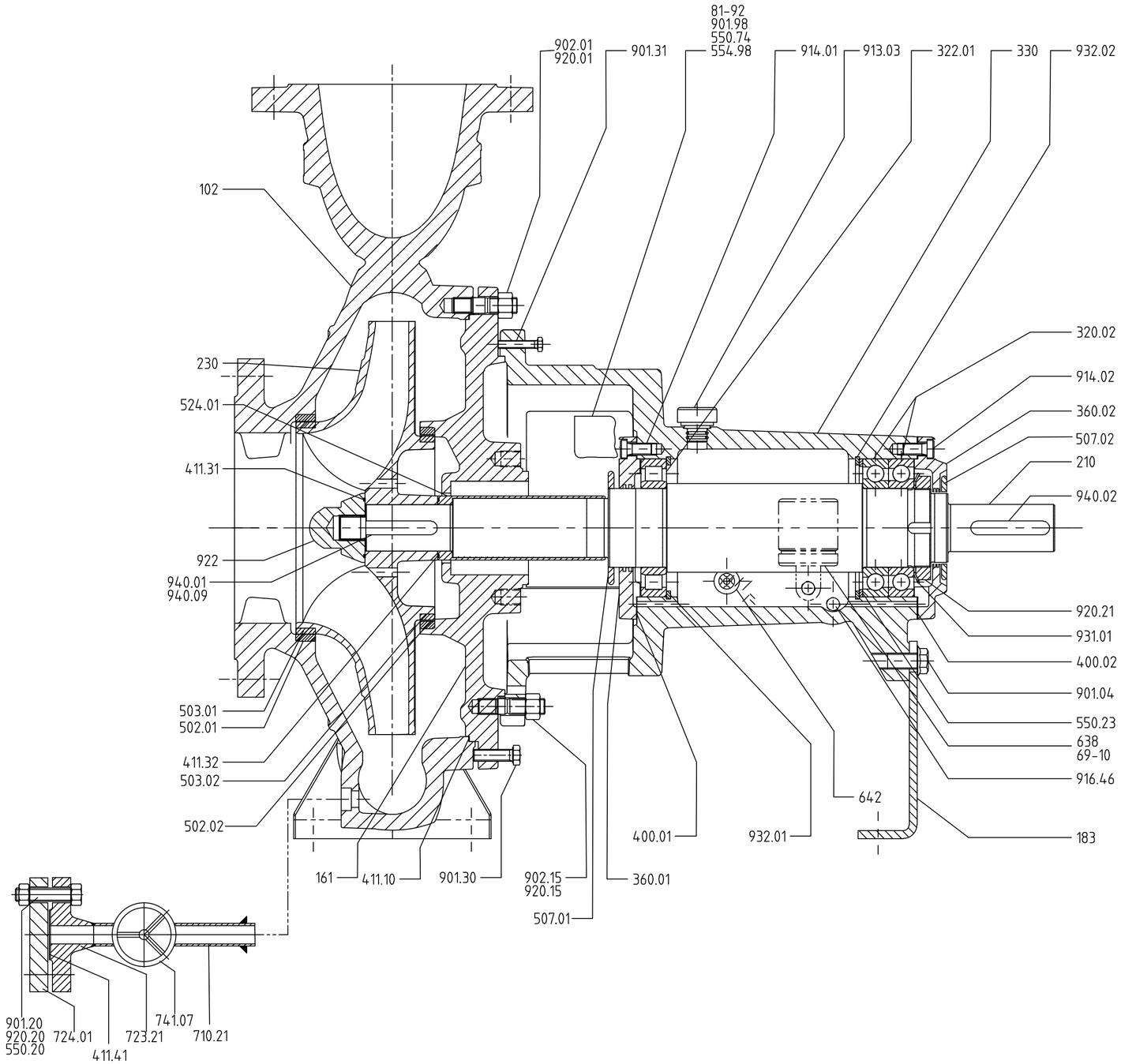

PROJECT (JOB No.: 0-6495-20)	
DOCUMENT CLASS: X	
ISSUE PURPOSE: AB	
RESULT CODE: A,B,R,F	( )
NEXT STATUS: FA,FR,FI,FC,AB	( )
RESUBMISSION DATE:	( )
RESPONSIBLE DEPT./PERSON:	( )
Review Date:	( )

A:Approved without Comment; B:Approved with Minor Comment
R:Not Approved; F:Not Subject to Review

Approval or review hereunder shall not be construed to relieve Vendor/Subcontractor of his responsibilities and liability under the Contract

Purchaser DOC. No.	ORIG.	PURCHASE ORDER NO.	SERIAL	REV.
	V	S2158-102-A	173	4

Rev	Date	Description	Prep'd	Chk'd	App'd
4	09/Oct/2015	AS BUILT	PA	NG	SI
3	15/MAY/2015	FOR CONSTRUCTION	PA	NG	SI
2	05/FEB/2015	FOR APPROVAL	ME	NG	SI
1	23/JAN/2015	FOR APPROVAL	WA	NG	SI
0	14/JAN/2015	FOR APPROVAL	WA	NG	SI

REVISIONS

Contractor JOB Code	Responsible Company
0-6495-20	SK

Prepared by	Checked by	Approved by
WA	NG	SI

NSRP
Complex Project
Nghi Son, Vietnam

Nghi Son Refinery and Petrochemical Limited Liability Company

SK engineering & construction

KSB

Plant Location: Nghi Son, Vietnam

Project Name: NSRP Complex Project

P.O. No.: 0-6495-PS 2158-160-A100

ITEM. NO.: 113-ST-301-P01 A/B

Drawing Title: Cross Sectional Drawing

Vendor DWG. No.	Sheet No.	Rev.
113-ST-301-P01 A/B-06	1	4

Contractor DWG.No.	Sheet Size	Scale
VS2158-102-A-173	A2	-:-

PURCHASER NO KUNDENAUFTRAGSNR	0-6495-PS2158-102-	
KSB ORDER NO KSB AUFTRAGSNR	9972669142	1600
ADD POS NO ZUS GUELT POS NR		
ALTERATION:INDEX/NO AENDERUNG:INDEX/ANZ	02	
EXPLO / EXPLOSION		
WELD / SCHWEISSPR		
CALCUL / BERECHNUNG		
QUALITY / QUALITAET		
APPR / GEPRUEFT	18.05.2015	STEISIE
PREP / BEARBEIT	15.05.2015	PATISWA1
EU01	DATE / DATUM	NAME / NAME

NX A2

TYPE / BAUREIHE: MCPK200-150-500 EC XMCE

DENOMINATION / BENENNUNG
GENERAL DRAWING
GESAMTZEICHNUNG
PLAN D'ENSEMBLE

SCALE / MASSSTAB: -:-

NO / NR: UG1534400 CDI D01

SHEET-NO / BLATT-NR: 1

OF / VON: 1

COPYRIGHT / SCHUTZVERMERK ISO 16016

REPL FOR / ERSATZ FUER

ORIG FROM / ENTSTANDEN AUS: UG1527746

KSB

INDRA
29-OCT-2015
AS BUILT

EDMS
19-Jul-2018
As-Built

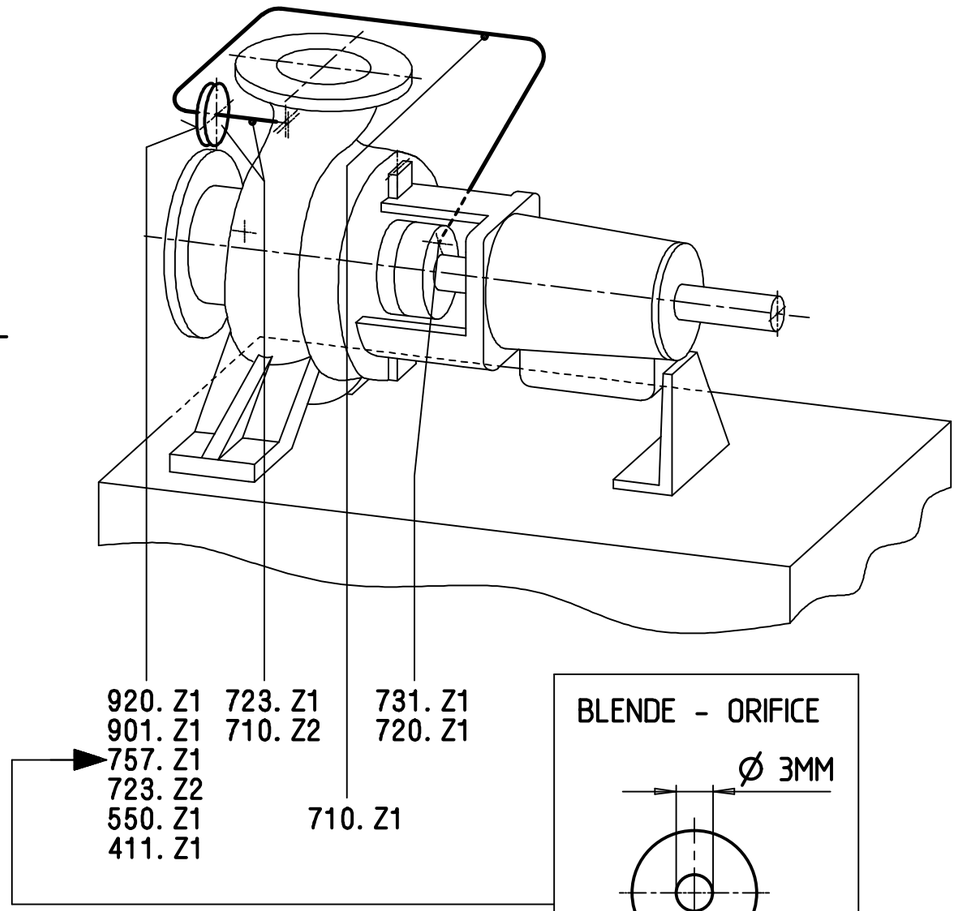

API-PLAN 11

PROJECT (JOB No.: 0-6495-20)		
DOCUMENT CLASS: X		
ISSUE PURPOSE: AB		
RESULT CODE: A,B,R,F	(	)
NEXT STATUS: FA,FR,FI,FC,AB	(	)
RESUBMISSION DATE:	(	)
RESPONSIBLE DEPT./PERSON:	(	)
Review Date:	(	)

A:Approved without Comment; B:Approved with Minor Comment
R:Not Approved; F:Not Subject to Review

Approval or review hereunder shall not be construed to relieve Vendor/Subcontractor of his responsibilities and liability under the Contract

Purchaser DOC. No.	ORIG.	PURCHASE ORDER NO.	SERIAL	REV.
	V	S2158-102-A	173	4

Rev	Date	Description	Prep'd	Chk'd	App'd
4	09/Oct/2015	AS BUILT	PA	NG	SI
3	15/MAY/2015	FOR CONSTRUCTION	PA	NG	SI
2	05/FEB/2015	FOR APPROVAL	WA	NG	SI
1	23/JAN/2015	FOR APPROVAL	WA	NG	SI
0	15/JAN/2015	FOR APPROVAL	WA	NG	SI

REVISIONS

Contractor JOB Code	Responsible Company
0-6495-20	SK

Prepared by	Checked by	Approved by
WA	NG	SI

NSRP
Complex Project
Nghi Son, Vietnam

Nghi Son Refinery and Petrochemical Limited Liability Company

SK engineering & construction

KSB

Plant Location: Nghi Son, Vietnam

Project Name: NSRP Complex Project

P.O. No.: 0-6495-PS 2158-160-A100

ITEM. NO.: 113-ST-301-P01 A/B

Drawing Title: Piping Drawing API-Plan 11

Vendor DWG. No.	Sheet No.	Rev.
113-ST-301-P01 A/B-06	1	4
Contractor DWG.No.	**Sheet Size**	**Scale**
VS2158-102-A-173	A3	-:-

PURCHASER NO KUNDENAUFTRAGSNR	0-6495-PS2158-102-	
KSB ORDER NO KSB AUFTRAGSNR	9972669142 1600	
ADD POS NO ZUS GUELT POS NR		
ALTERATION:INDEX/NO AENDERUNG:INDEX/ANZ	02	
EXPLO / EXPLOSION		
WELD / SCHWEISSPR		
CALCUL / BERECHNUNG		
QUALITY / QUALITAET		
APPR / GEPRUEFT	18.05.2015	STEISIE
PREP / BEARBEIT	15.05.2015	PATISWA1
EU01	DATE / DATUM	NAME / NAME

NX A3

TYPE / BAUREIHE: MCPK200-150-500 EC XMCE

DENOMINATION / BENENNUNG
PIPELINE
ROHRLEITUNG
TUYAUTERIE

SCALE / MASSSTAB: -:-

KSB

NO / NR: UG1534526 CDI D01

SHEET-NO / BLATT-NR: 1

COPYRIGHT / SCHUTZVERMERK

ISO 16016

REPL FOR / ERSATZ FUER

ORIG FROM / ENTSTANDEN AUS: UG1527940

OF / VON: 1

INDRA
29-OCT-2015
AS BUILT

EDMS
19-Jul-2018
As-Built

Einzelteilverzeichnis List Components	Schutzvermerk ISO 16016 Copyright to ISO 16016	MCPK200-150-500 EC XMCF 09004A Pumpe pump		KSB
Auftrags-Nr. / Pos. Order number / item. 9972669142/ 001600	Serien-Nr. Serial number 113-ST-301-P01A/B	Name Name Steinbrecher	Stellenkurzz. Dept. code ECO1O411	Datum Date 14.01.2015

Teile-Nr. Part. number Repere		ME	Menge/Einh. Quantity/unit	Benennung Description		Werkstoff Material Materiaux
102		ST	1	SPIRALGEHAEUSE VOLUTE CASING	200-150-500-D	GP240GH+N/A216 GR WCB
161		ST	1	GEHAEUSEDECKEL CASING COVER	80-500	GP240GH+N/A216 GR WCB
183		ST	1	STUETZFUSS SUPPORT FOOT	B 140X238	ST [CS]
210		ST	1	WELLE SHAFT	CS80-DRY	C45+N [A576 Gr. 1045]
230		ST	1	LAUFRAD IMPELLER	150-500	1.4408/A743 GR CF8M
320	02	ST	2	SCHRAEGKUGELLAGER ANGULAR CONTACT BALL BEARING	7216B UA	ST [CS]
322	01	ST	1	ZYLINDERROLLENLAGER CYLINDRICAL ROLLER BEARING	NU 216 E	ST [CS]
330		ST	1	LAGERTRAEGER BEARING BRACKET	CS 80	EN-GJS-400-18-LT [A536 Gr. 60-40-18]
360	01	ST	1	LAGERDECKEL BEARING COVER	CS80 P	EN-GJL-250/A48 CL 35B
360	02	ST	1	LAGERDECKEL BEARING COVER	CS80 M	EN-GJL-250/A48 CL 35B
400	01	ST	1	FLACHDICHTUNG GASKET	N140/185X0,5	DPAF [Asbestos free]
400	02	ST	1	FLACHDICHTUNG GASKET	N140/185X0,5	DPAF [Asbestos free]
411	10	ST	1	DICHTRING GASKET	510 /529 X1	PTFE-GF 25 [Glass filled PTFE]
411	31	ST	1	DICHTRING JOINT RING	A 54/ 60 X1,5	CRNI-GRAFIT 1F [316-GRAPHITE]
411	32	ST	1	DICHTRING JOINT RING	A 54/ 60 X1,5	CRNI-GRAFIT 1F [316-GRAPHITE]
411	41	ST	1	DICHTRING JOINT RING	B 27/ 57 X1,5	CRNI-GRAFIT 1S [316-GRAPHITE]
411	Z1	ST	2	SPIRALDICHTUNG SPIRAL WOUND GASKET	A 1/2-CL 600	316L-GRAFIT
433		ST	1	GLEITRINGDICHTUNG MECHANICAL SEAL	LMA256-065	VXVVC
502	01	ST	1	SPALTRING CASING WEAR RING	225/240X20	VG 434 [A890 Gr.5a UNS-J93404]
502	02	ST	1	SPALTRING CASING WEAR RING	255/270X25	VG 434 [A890 Gr.5a UNS-J93404]
503	01	ST	1	LAUFRING IMPELLER WEAR RING	210/225,2X20	(CRNIMO ST INT) [A276 316 Ti]
503	02	ST	1	LAUFRING IMPELLER WEAR RING	240/255,2X25	(CRNIMO ST INT) [A276 316 Ti]
507	01	ST	1	SPRITZRING THROWER	S 80	ST [CS]
507	02	ST	1	SPRITZRING THROWER	S 70	ST [CS]

INDRA
29-OCT-2015
AS BUILT

EDMS
19-Jul-2018
As-Built

Einzelteilverzeichnis List Components	Schutzvermerk ISO 16016 Copyright to ISO 16016	MCPK200-150-500 EC XMCF 09004A Pumpe pump		KSB
Auftrags-Nr. / Pos. Order number / item. 9972669142/ 001600	Serien-Nr. Serial number 113-ST-301-P01A/B	Name Name Steinbrecher	Stellenkurzz. Dept. code ECO1O411	Datum Date 14.01.2015

Teile-Nr. Part. number Repere		ME	Menge/Einh. Quantity/unit	Benennung Description		Werkstoff Material Materiaux
524	01	ST	1	WELLENSCHUTZHUELSE SHAFT PROTECTING SLEEVE	47/65X170	(CRNIMO ST INT) [A276 Type 316Ti]
550	20	ST	4	SCHEIBE WASHER	12-200 HV	A4 [A193 Gr B 8 M]
550	23	ST	1	STUETZSCHEIBE SUPPORT DISC	126/140X 3,5	ST [CS]
550	74	ST	4	SCHEIBE WASHER	6-200 HV	ST+A2A [CS galv.]
550	Z1	ST	8	SCHEIBE WASHER	12-200 HV	A4 [A193 Gr B 8 M]
554	98	ST	4	SICHERUNGSSCHEIBE LOCK WASHER	B M 6	1.4301/AISI 304
638		ST	1	OELSTANDREGLER CONSTANT LEVEL OILER	AR 1/4	GZN-GLASS
642		ST	1	OELSTANDSAUGE OIL LEVEL SIGHT GLASS	B G 3/4B	B1A1
69-10		ST	1	SCHUTZKORB PROTECTIVE CAGE	A	ST+GAL ZN [CS galv.]
710	21	M	0,200	ROHR PIPE	26,7X 3,91D2-T3	1.4571 [A276 316 Ti]
710	Z1	M	1,000	ROHR PIPE	21,3X 3,2 D2-T3	1.4571 [A276 316 Ti]
710	Z2	M	0,100	ROHR PIPE	21,3X 3,2 D2-T3	1.4571 [A276 316 Ti]
720	Z1	ST	1	REDUZIERSTUECK REDUCER	21,3X 2,9X 12 X 1,6	1.4571 [A276 316 Ti]
723	21	ST	1	VORSCHWEISSFLANSCH WELDING NECK FLANGE	RF 3/4	1.4571 [A276 316 Ti]
723	Z1	ST	1	EINSTECKFLANSCH SOCKET WELDING FLANGE	RF 1/2	1.4571 [A276 316 Ti]
723	Z2	ST	1	EINSTECKFLANSCH SOCKET WELDING FLANGE	RF 1/2	1.4571 [A276 316 Ti]
724	01	ST	1	BLINDFLANSCH BLIND FLANGE	RF 3/4	1.4571 [A276 316 Ti]
731	Z1	ST	1	VERSCHRAUBUNG PIPE UNION	M 1 B 10 NPT	1.4571 [A276 316 Ti]
744	07	ST	1	ABSPERRSCHIEBER GATE VALVE	CL800-3/4IN-80,BW	A182-F316/A182
757	Z1	ST	1	DROSSEL THROTTLE	3/51X4 M.FAHNE	1.4571 [A276 316 Ti]
81-92		ST	2	ABDECKBLECH COVER PLATE	CS80	1.4301 [A276 Type 304]
901	04	ST	1	SECHSKANTSCHRAUBE HEXAGON HEAD SCREW	M 16 X 30	ST [CS]
901	20	ST	4	SECHSKANTSCHRAUBE HEXAGON HEAD SCREW	M12 X 50	A4-70 [A193 Gr B 8 M]
901	30	ST	2	SECHSKANTSCHRAUBE HEXAGON HEAD SCREW	M12 X 40	ST+A2A [CS galv.]

INDRA
29-OCT-2015
AS BUILT

EDMS
19-Jul-2018
As-Built

Einzelteilverzeichnis List Components	Schutzvermerk ISO 16016 Copyright to ISO 16016	MCPK200-150-500 EC XMCF 09004A Pumpe pump		KSB
Auftrags-Nr. / Pos. Order number / item. 9972669142/ 001600	Serien-Nr. Serial number 113-ST-301-P01A/B	Name Name Steinbrecher	Stellenkurzz. Dept. code ECO1O411	Datum Date 14.01.2015

Teile-Nr. Part. number Repere		ME	Menge/Einh. Quantity/unit	Benennung Description		Werkstoff Material Materiaux
901	31	ST	2	SECHSKANTSCHRAUBE HEXAGON HEAD SCREW	M 8 X 50	ST+A2A [CS galv.]
901	98	ST	4	SECHSKANTSCHRAUBE HEXAGON HEAD SCREW	B M 6 X 10 - 5	8.8+A2A/ 8.8+B633 SC1 TP3
901	Z1	ST	4	SECHSKANTSCHRAUBE HEXAGON HEAD SCREW	M12 X 65	A4-70 [A193 Gr B 8 M]
902	01	ST	20	STIFTSCHRAUBE STUD	M 16 X 45	1.7709+QT+A2D [A193 Gr. B16- Galv.]
902	02	ST	4	STIFTSCHRAUBE STUD	M16 X 80	A4-70 [A193 Gr B 8 M]
902	15	ST	12	STIFTSCHRAUBE STUD	M 16 X 50	1.7709+QT/A193 GR B7
913	03	ST	1	ENTLUEFTUNGSSCHRAUBE VENT PLUG	A 1/2 -14NPT	NACH HERSTELLER [Acc. to manufact.]
914	01	ST	4	ZYLINDERSCHRAUBE HEXAGON SOCKET HEAD CAP SCREW	M 12 X 25	8.8+A2A/ 8.8+B633 SC1 TP3
914	02	ST	4	ZYLINDERSCHRAUBE HEXAGON SOCKET HEAD CAP SCREW	M 12 X 25	8.8+A2A/ 8.8+B633 SC1 TP3
916	46	ST	1	STOPFEN PLUG	A 1/2-14 NPT	ST [CS]
920	01	ST	20	SECHSKANTMUTTER HEXAGON NUT	M16	1.7218+QT+A2D [A193 Gr. 37 galv.]
920	02	ST	4	SECHSKANTMUTTER HEXAGON NUT	M16	A4-70 [A193 Gr B 8 M]
920	15	ST	12	SECHSKANTMUTTER HEXAGON NUT	M16	1.7218+QT+A2D/A194 GR 7/GR 2H+B633 SC1 TP2
920	20	ST	4	SECHSKANTMUTTER HEXAGON NUT	M12	A4-70 [A193 Gr B 8 M]
920	21	ST	1	NUTMUTTER SLOTTED ROUND NUT	KM 16	ST [CS]
920	Z1	ST	4	SECHSKANTMUTTER HEXAGON NUT	M12	A4-70 [A193 Gr B 8 M]
922		ST	1	LAUFRADMUTTER IMPELLER NUT	CS80	(CRNIMO ST INT) [A276 316 Ti]
931	01	ST	1	SICHERUNGSBLECH LOCK WASHER	MB 16	DC01-A [A106 UNS-G 10080]
932	01	ST	1	SICHERUNGSRING CIRCLIP	140 X 4	FST+PHR
932	02	ST	1	SICHERUNGSRING CIRCLIP	140 X 4	FST+PHR
940	01	ST	1	PASSFEDER PARALLEL KEY	A 14X 9X 70	C45+C/A311 GR 1045 CL. A
940	02	ST	1	PASSFEDER PARALLEL KEY	A 14X 9X 80	C45+C/A311 GR 1045 CL. A
940	09	ST	1	PASSFEDER PARALLEL KEY	A 14X 9X 70	C45+C/A311 GR 1045 CL. A

Materialbezeichnungen mit [...] sind nur äquivalente ASTM Material-Codes zum verwendeten DIN Werkstoff.
Material terms with [...] are only equivalent material ASTM codes for DIN material used.

INDRA
29-OCT-2015
AS BUILT